Instruction Manual

DENALI®

SoundBomb Mini Low-Tone Horn

TT-SB.10200.B

Thank you for choosing DENALI

We know you would rather be enjoying your vehicle than wrenching on it, so we go the extra mile to make sure our instructions are clear and as easy to understand as possible. If you have any questions, comments, or suggestions don't hesitate to give our gear experts a call at 401.360.2550 or visit WWW.DENALIELECTRONICS.COM

Please Read Before Installing

DENALI products should always be installed by a qualified technician. If you are unsure of your ability to properly install a product, please have the product installed by your local motorcycle dealer. DENALI takes no responsibility for damages caused by improper installation. **Caution:** When installing electronics it is extremely important to pay close attention to how wires are routed, especially when mounting products to the front fender, front forks, or fairing of a motorcycle. Always be sure to turn the handle-bars fully left, fully right, and fully compress the suspension to ensure the wires will not bind and have enough slack for your motorcycle to operate properly.

Installation Tips

We strongly recommend using medium strength liquid thread locker on all screws, nuts, and bolts. It is also important to ensure that all hardware is tightened to the proper torque specifications as listed in your owner's manual. For included accessory hardware please refer to the default torque specifications provided below. Inspect all hardware after the first 30 miles to ensure proper torque specifications are maintained.

Bolt Size	in-lbs	ft-lbs	Nm
M3	10.0 in-lbs	-	1.0 Nm
M4	23.0 in-lbs	-	2.5 Nm
M5	44.5 in-lbs	3.5 ft-lbs	5.0 Nm
M6	78.0 in-lbs	6.5 ft-lbs	9.0 Nm
M8	-	13.5 ft-lbs	18.0 Nm
M10	-	30.0 ft-lbs	41.0 Nm
M12	-	52.0 ft-lbs	71.0 Nm

Hardware Sizing Guide

Not sure what size bolt you have? Use this ruler to measure screws, bolts, spacers, etc. Remember, the length of a screw or bolt is measured from the start of the "mounting surface" to the end of the screw, so only include the screw head when measuring countersunk screws.

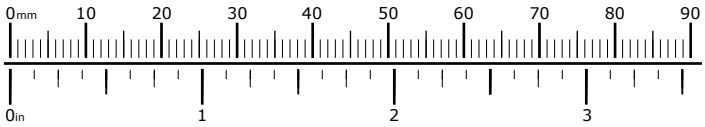

What's In The Box?

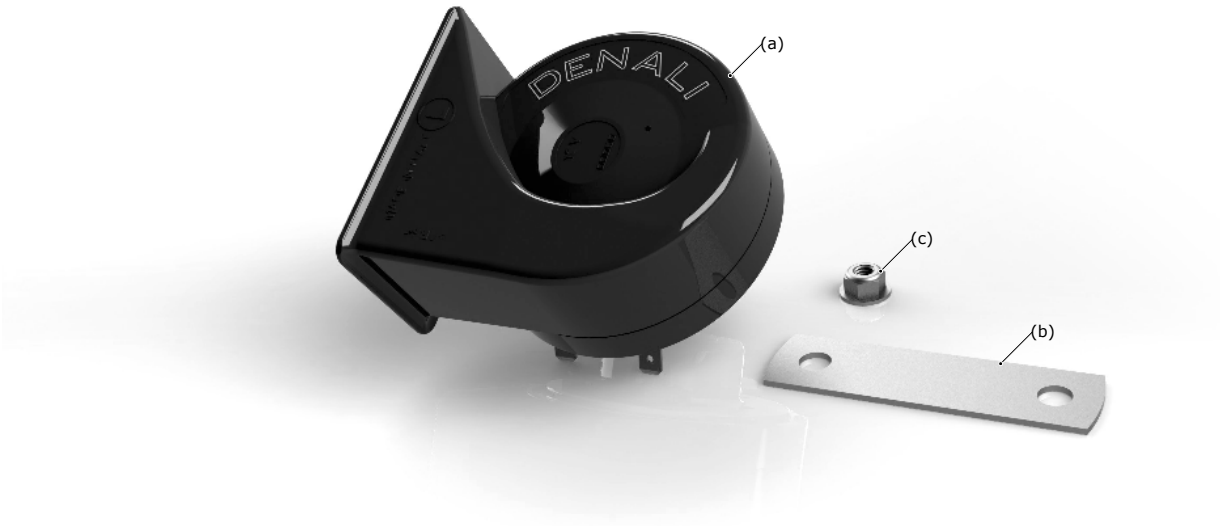

Kit Contents

(a) SoundBomb Mini Horn.....Qty 1

(b) Mounting Bracket.....Qty 2

(c) M6 Nut DIN 6927.....Qty 1

1. Mounting The Horn

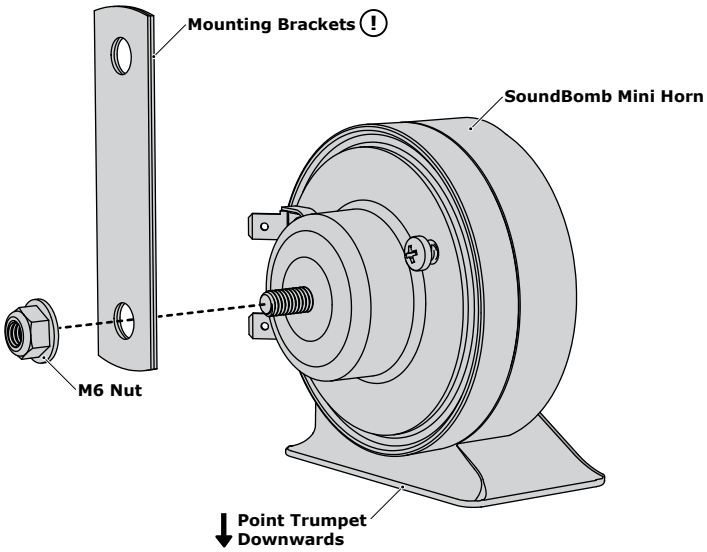

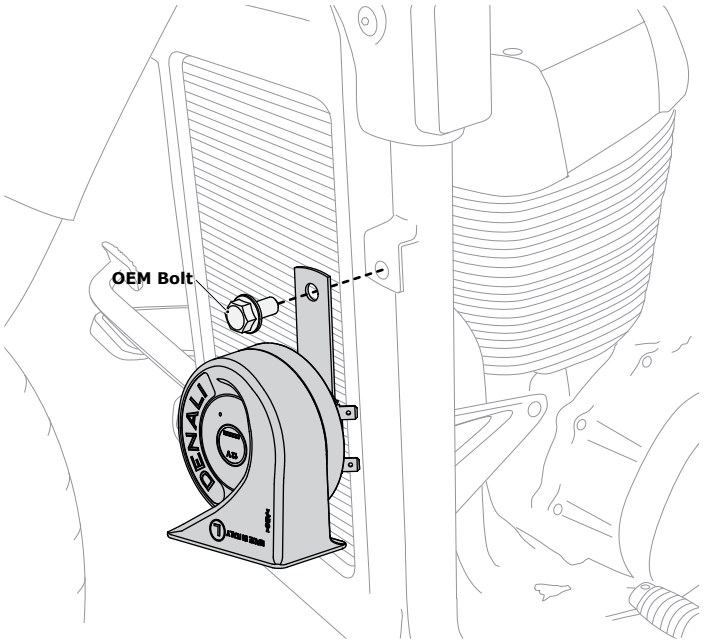

1.1 - Assembling The Horn

The compact size of the SoundBomb Mini allows it to be mounted directly in place of the OEM horn on most motorcycles.

Step One: Stack the Mounting Brackets (b) and orient them with the Horn (a) so that the horn's trumpet will be pointing downwards once installed on the vehicle.

Step Two: Use the M6 Nut (c) to tighten the Brackets (b) to the Horn (a)

(!) **Note:** The Mounting Brackets must be used when installing the Horn. If mounted to a rigid bracket the sound output will be adversely affected.

1.2 - Mounting The Horn

Step one: Mount the horn to the vehicle. If you are placing the SoundBomb Mini in the location of the OEM horn, simply re-use the OEM bolt. Alternate mounting locations may require additional hardware.

Note: Be sure that the trumpet is facing downwards so that it can properly drain road spray. Excess water build up in the horn could lead to failure.

2. Wiring The Horn

Note: This drawing is not to scale. Components enlarged for illustration purposes only.

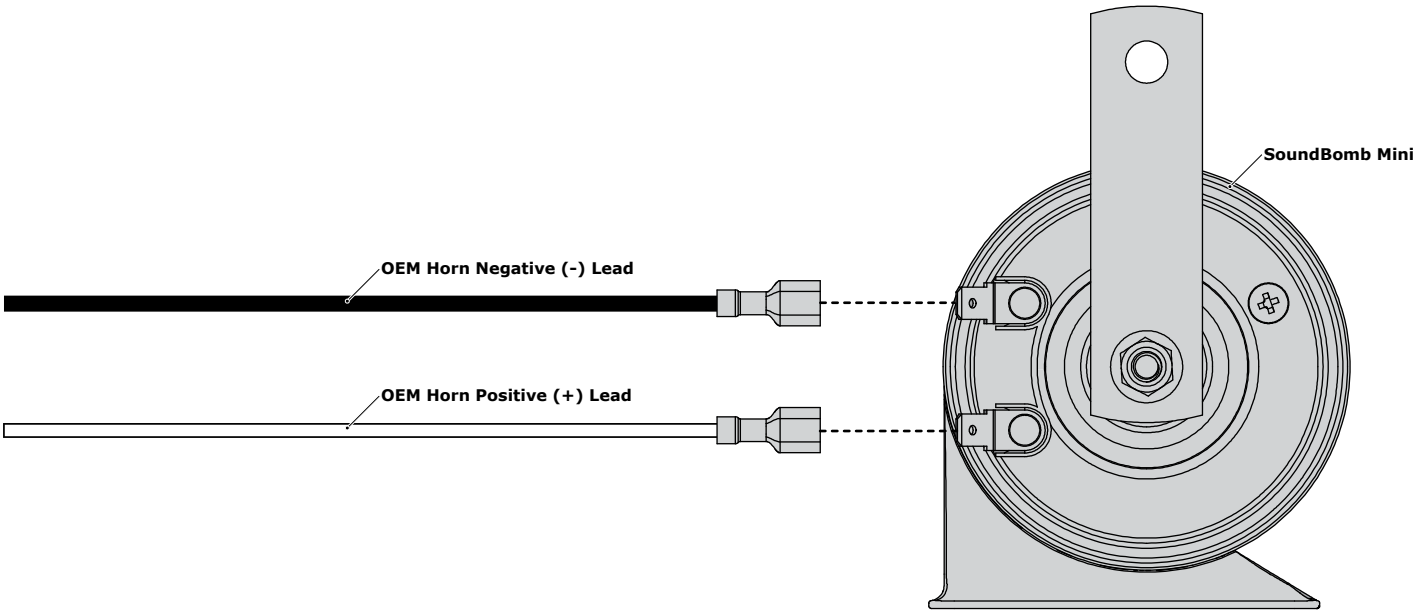

2.1 - Wiring

Step One: To wire the horn, simply take the negative and positive leads from the OEM horn and connect them to the terminals on the back side of the SoundBomb Mini (a).

Note: There is no polarity to the terminals on the SoundBomb Mini, the leads can be connected in either orientation.